Reprinted from "Motor Cycling," October 17 and 24, 1940.

Servicing LUCAS Ignition and Lighting Sets

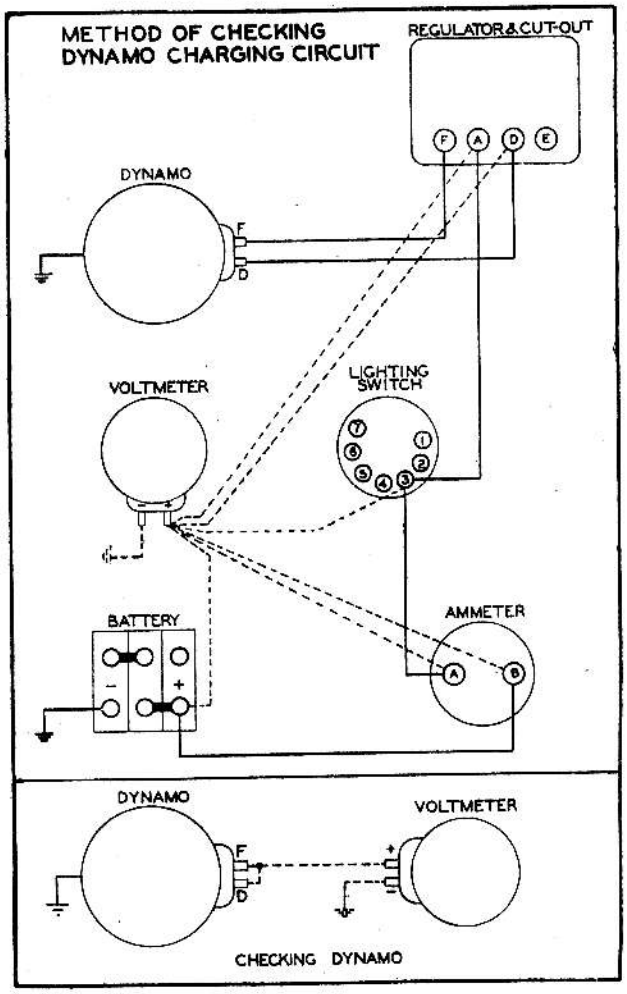

PART ONE

(Left) This chart, read in conjunction with the fault-finding table below, will enable any defect to be traced quickly. The step-by-step process is explained in detail in the text.

FAULT-FINDING TABLE

SYMPTOMS		CAUSES	REFERENCE
Battery in low state of charge	Dynamo giving low or intermittent output	Commutator dirty	Para. 1
		Commutator worn	" 2
		Brushes sticking	" 3
		Brushes worn	" 4
		Brush springs weak	" 5
		Regulator out of adjustment	" 6
	Dynamo not charging	Commutator dirty	Para. 1
		Brushes worn	" 4
		Regulator out of adjustment	" 6
		Cut-out damaged	" 7
		Cut-out contacts dirty or damaged	" 8
		Battery needs attention	Battery section
Battery overcharged. Burnt out bulbs and frequent "topping-up"		Regulator out of adjustment	Para. 6
		Battery	Battery section

(Above) Having traced any particular fault in the dynamo, the correct method of curing the defect can be found by reference to the appropriate paragraph on pages 56 and 57.

WITH the approach of longer hours of darkness the lighting systems of Service machines will be subjected to an increasing amount of work. Troubles may be experienced whose location and rectification is facilitated by reference to a practical set of instructions issued by Joseph Lucas, Ltd., which we reproduce with a few minor modifications and deletions to make the notes refer expressly to the lighting and ignition sets now being fitted to Norton, B.S.A., Royal Enfield, Triumph, Ariel and Matchless machines. The first five have Magdynos, whilst the Matchless has a magneto and an independently driven dynamo; however, the wiring diagrams are the same, so there is no need to treat the different layouts separately.

All our remarks are based on the assumption that a machine has been returned to a workshop for repair and that the routine maintenance adjustments have been attended to by the rider, he being in no way responsible for the trouble in question.

To start with, we will run through a list of fault-locating operations in their progressive sequence, which should be read in conjunction with the appropriate wiring diagram. A good-class moving coil voltmeter 0-10 volts is essential, fitted with two insulated wires, each 2 ft. 6 ins. long, and a pair of battery clips. Adopt the following procedure to check the dynamo charging circuit.

(1) See that the dynamo is correctly connected to the regulator and cut-out box. The yellow lead must in each case go to the terminal marked D, and the green and black lead to the terminal marked F. Make sure that the negative battery lead is effectively earthed to the engine or the frame.

(2) To check the dynamo itself, disconnect the two leads which plug into the end cover and join the terminals with a short length of wire. Clip the negative lead to a good earth on the dynamo and the positive to the wire joining the dynamo terminals.

Start the engine and increase the speed gradually. If the instrument is in order, a reading above 4 volts will be recorded. It should be noted that this reading will vary with engine speed. Do not allow the reading to exceed 8 volts. If no reading, or a low figure, is shown, the dynamo must be removed and tested as explained later, or serviced according to the fault-finding table. If the dynamo is correct, disconnect the voltmeter, remove the wire joining the dynamo terminals and reconnect the original leads to their respective terminals.

(3) Leaving the voltmeter connected to earth, as in all subsequent

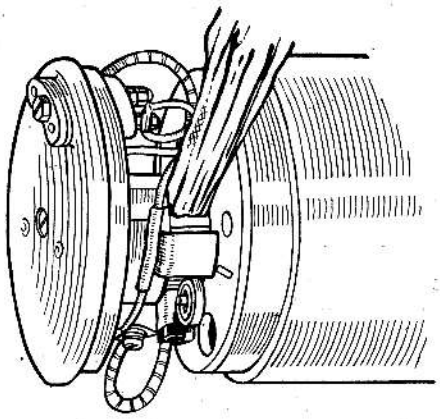

A dirty commutator can be cleaned with a petrol moistened rag pressed against the work with a piece of wood.

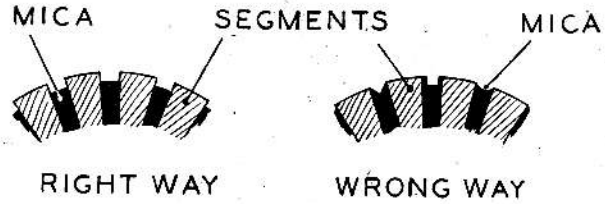

(Above) When undercutting the insulation of the commutator, great care should be taken to ensure a flat cut over the full width of each mica segment.

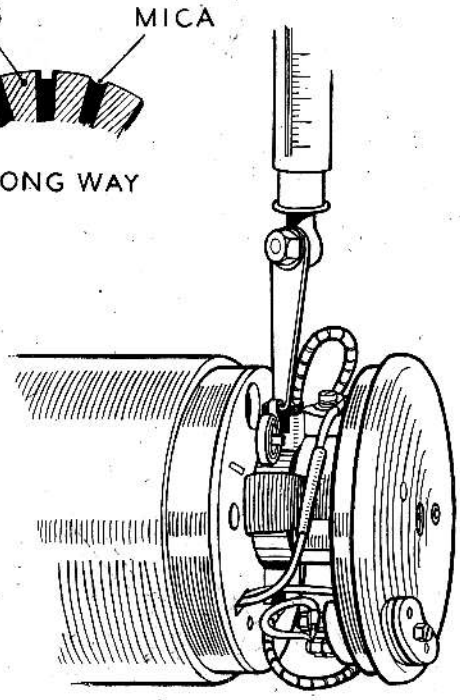

(Right) The approved "Works" method of testing the strength of brush springs is by means of a spring balance terminating in a hooked arm.

tests, contact the regulator terminal D with the + wire. Run the engine as before, and in all subsequent tests. No reading indicates a loose connection at the dynamo or regulator terminal D, or the lead between these two is broken.

At this point disconnect the earth lead from the battery.

(4) Contact the + wire to the regulator and cut-out terminal A. No reading indicates an internal fault which should be dealt with as explained later in the text.

If no fault has been located up to this point, it will be necessary to remove the ammeter and switch panel from the rear of the head lamp.

(5) Connect voltmeter + to the terminal 3 on the lighting switch. No reading indicates a broken connection at the switch terminal or at terminal A in the cutout and regulator unit, or a break in the lead joining these two terminals.

(6) Connect voltmeter + to the terminal A on the ammeter. No reading indicates a broken connection at No. 3 terminal on the switch or terminal A, or the wire between them is broken.

(7) Connect voltmeter + to the terminal B on the ammeter. No reading indicates an internal fault in the ammeter, and it is advisable to replace it with a new instrument.

(8) Connect voltmeter + to the positive terminal of the battery. No reading indicates a broken connection at B terminal on the ammeter or the positive terminal on the battery, or the wire between them is broken.

The cure for broken connections or wires is obvious, and how to deal with other defective parts is explained later.

Assuming that the dynamo is found to be at fault on the Magdyno units, it can be removed after undoing the slotted nut at the top of the driving end bracket, and slackening any clamping strap. If a service instrument is available it can be fitted, the old instrument later repaired and placed back into stores.

The field windings can be tested by earthing the dynamo and connecting the voltmeter in series between a 6-volt battery + terminal and the F terminal on the dynamo. Battery — is earthed, and provided a reading of 6 volts is recorded the field wiring is in order. If not, the dynamo should be returned to the works for overhaul.

A check can be made on the soundness of the armature by motoring the dynamo with a battery. The two leads from the dynamo must be connected with a wire, the dynamo body earthed, battery — earthed and battery + connected to the shorted terminal leads, then gripping the dynamo pinion with the right or free hand. If there is a complete breakdown in the armature circuit, there will be no inclination for it to rotate in any position; on the other hand, it may show a steady pull on most segments, but an odd one or two may be weak or have no pull at all, indicating that they are the offending parts. Certain skilled electricians may be in a position to effect the necessary repair without having to return the dynamo to the makers.

Naturally the brush flexes must already have been checked for soundness.

So far we have only referred to a charging circuit which shows no charge at all, but trouble may also be due to the dynamo giving a low or intermittent output, so allowing the battery to get into a low state of

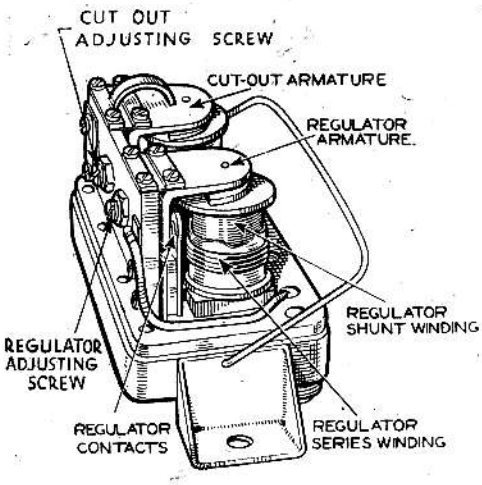

This illustration of the cut-out and regulator unit indicates clearly the points of adjustment. It is a delicate unit and should be handled carefully.

charge. The simplest way of setting out the possible causes is by means of a table, with reference numbers to give a guide to paragraphs which explain the cures. In many cases the dynamo must be removed and the information should be read in conjunction with the fault-finding process.

(1) **Dirty Commutator**

A commutator in good condition is clean and free from pits or burned spots. It can be cleaned with the aid of a petrol-soaked rag pressed against it by a bit of wood ½ in. square, some 6 ins. long, whilst the engine is revolved slowly with the kickstarter. Failing this it can be polished with a strip of *fine* glass-paper round the end of the same

stick. In this case the brushes and holders should be blown out with a pump after the polishing is finished.

(2) **A Worn Commutator**

To remedy a worn commutator it is necessary to remove the armature from the dynamo and mount it complete with its end bracket in a lathe. As little metal as possible should be taken away in light cuts with a sharp tool, until any pit marks have disappeared. A finish polish is put on with *fine* glasspaper.

The mica insulation between the commutator segments must then be undercut to a depth of 1-32 in. below the surface of the segments. A hacksaw blade ground down until it is only slightly wider than the mica forms a good tool. It should be drawn backwards and forwards along the mica until the latter is undercut to the correct depth. The armature can then be replaced in the dynamo.

(3) **Brushes, Sticking**

Test for a sticking brush by holding back the brush spring with a small screwdriver or hook, and move the brush in its holder. If it sticks, remove it and clean in petrol, at the same time ascertaining that the holder is clean.

(4) **Brushes, Worn**

When a brush has worn so that its spring does not press it on to the commutator it must be replaced. The brush lead is set in the brush, which must be removed complete after unscrewing the eyelet on the end of the lead.

(5) **Brush Springs Weak**

Sometimes the brush springs become weak, so allowing the brushes to jump on the commutator. If there is any doubt on this point, a small spring balance with a hook on the end can be used to check the tension, which should be between 10-15 oz.

(6) **Adjustment of the Voltage Regulator**

Before checking the instrument always make sure that the D and F leads to the dynamo (coloured yellow and green-and-black respectively) are connected to their correct terminals at both ends, otherwise any instrument has only a limited life.

Disconnect the lead from the A terminal of the regulator unit; connect the positive lead of the voltmeter to the dynamo terminal D and connect the other lead from the voltmeter to the dynamo end bracket or to any other convenient earth on the motorcycle frame. Start the engine and increase the speed until the voltmeter "flicks" and then steadies; this reading should lie within the limits 7.7-8.3 volts at normal temperature. If the reading lies outside these limits, the regulator needs adjusting.

Stop the engine, remove the cover of the regulator unit and release the lock nut holding the adjusting screw. Turn the adjusting screw in a clockwise direction to raise the setting and in an anti-clockwise direction to lower the setting. Turn the screw only a fraction of a turn and tighten the lock nut after making the adjustment before checking the setting.

A special regulator marked NiFe is supplied for use with batteries of this make. If a NiFe battery is substituted for the lead-acid type or vice versa, a new regulator must be fitted, although the existing type will function temporarily.

(7) **Cut-out Damaged**

Check the cut-out by connecting together the terminals marked A and D on the cut-out and regulator unit. This short-circuits the cut-out. If a dynamo output is then shown on the ammeter, then either the shunt or series winding of the cut-out is open-circuited or the contacts are burnt or dirty. The contacts can be cleaned as described in paragraph 8. If this does not rectify the fault, inspect the shunt and series windings for obvious open circuit. Finally, if the fault cannot be found the unit must be replaced.

(8) **Cut-out Contacts Burnt or Dirty**

To clean the cut-out contacts, remove the cover of the unit, place a strip of fine glasspaper between the contacts, and then, closing the contacts by hand, draw the paper through. This should be done two or three times with the abrasive side towards each contact.

So far no mention has been made of a persistent overcharge rate. Two causes are a high-voltage control setting and/or one or more battery cells which are shorting.

PART TWO

THE first instalment of this article, published last week, dealt with various faults in the dynamo and its circuit and approved methods of rectification. This week the battery is the first item to be dealt with.

This is not likely to cause much trouble if it receives its fair share of maintenance, the chief point being to keep the acid level just over the tops of the separators by adding distilled water when necessary. Only the water evaporates and not the acid, but if through some mischance the acid is spilled it must be replaced by sulphuric acid diluted to the same specific gravity as the acid in the cell to which it is to be added.

The most satisfactory way to check the state of charge in a battery is by means of a hydrometer, which gives the specific gravity of the acid. These readings give a good indication of the condition of each cell and can be read off as follow:—

	Spec. Gravity.
Fully charged ...	1.285-1.300
Half-discharged ...	1.210
Fully discharged ...	Below 1.150

The reading in each cell should be approximately the same. If one cell is very different to the other two, either a quantity of acid has been lost and the cell topped-up with too much water or the plates are shorting. In the first case the s.g. of the weak cell can be restored by a suitable mixture of sulphuric acid, but in the second case a service battery should be fitted without delay to prevent overcharging and possible light failure.

From time to time the ventilation holes in the vent plugs should be examined and, if necessary, cleaned out with a wire. If these holes become stopped up pressure may be set up in the cell resulting in damage to the plates or walls. Make sure the rubber washer is fitted under each vent plug, otherwise the electrolyte will leak, causing a short between the terminals or eating away the rubber leads. A smear of vaseline on the positive terminal puts a stop to corrosion at this point.

If for any reason the battery has to be charged from an external supply, check up the acid level and charge with a constant current of 1.2 amperes until the s.g. of the electrolyte remains constant at 1.285-1.300.

There is little comment to make on the lamp and horn wiring which is shown clearly in the diagram with the ring colours against the various wire numbers in a table. Although the circuit is identical for all models the cable harness is not interchangeable.

The main positive wire from the battery leads to B terminal in the ammeter, whence a second wire is taken to the horn. Thus a short in the horn wire will *not* show on the ammeter, so in case of damage to this wire remember to secure it so that the bare end does not touch any part of the frame. Some old systems took the horn wire direct from the battery + to the horn terminals, so the same remarks apply.

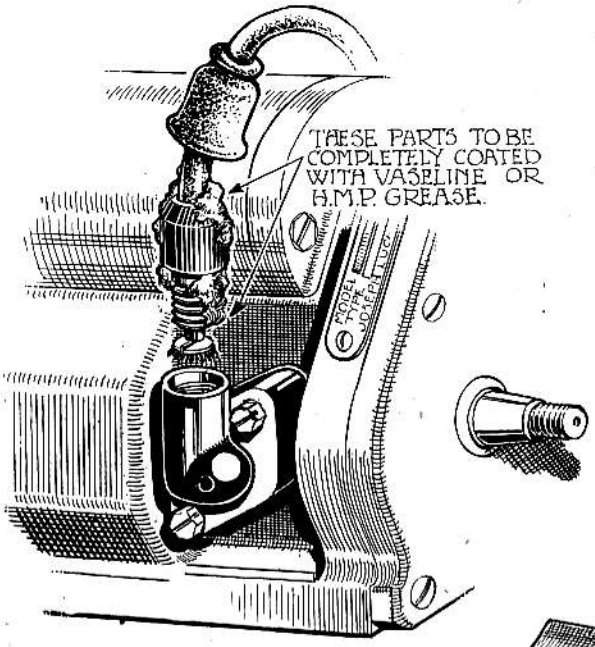

Severe cross-country conditions may force water beneath the protective rubber sleeve over the high-tension pick up. The remedy is to apply vaseline or grease as shown in the illustration.

Before tackling any head lamp job make certain the earthing wire between the head lamp shell and the reflector is good, and in the case of the tail light ascertain that the tail lamp body has a good contact with the number plate. These points are most important.

Start checking lighting faults at ammeter terminal B with the voltmeter-clip attached to an unpainted portion of the frame, then test in sequence as follows:—

(1) Apply the positive clip to ammeter B. No reading indicates a broken connection or wire between this and Battery +.

(2) Apply voltmeter + to ammeter A. No reading means a faulty ammeter, whose coil may have melted due to a short, or one of the terminals may have become twisted from the coil by over-tightening. In either case replace the ammeter with a new one.

(3) Apply voltmeter + to No. 3 terminal in the switch. No reading means broken connections or wire between here and ammeter A. This is the main distribution terminal to the whole lighting system and is therefore a key point.

(4) **Tail Light**

Examine the bulb. If apparently good, short the central contact with the bulb holder by flicking them together with a screwdriver end, whilst pressing the holder against the edge of the number plate. If there is no spark, check the switch with the voltmeter moving progressively from No. 3 terminal to No. 7 and on to No. 1. This will enable the break to be located as in previous tests.

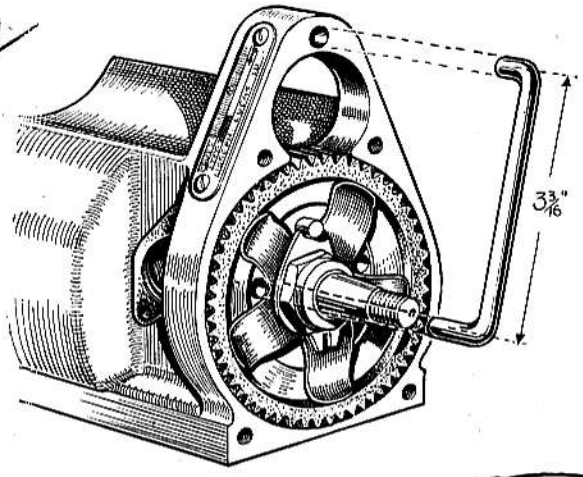

(Left) When dismantling the "slipping clutch" on the Magdyno this U-shaped tool will prove invaluable. Mild-steel ¼-in. rod is suggested.

(Below) When removing the ball bearings which carry the armature, this tool makes a tricky job quite easy.

(5) **Pilot Bulb**

Check the bulb and its contact in a similar manner, and if this does not reveal any current check the wire from No. 2 switch terminal.

(6) **Main Bulb**

Check the bulb and both contacts in the same way, switching the dipper as required. If no current is present on either, check the wire (blue and white) between the dipper switch and No. 4 terminal in the main switch. Mend this wire if broken, or if the trouble lies in the switch dismantle the dipper switch spindle, free it and replace with a spot of engine oil or thin grease.

Magneto

In dealing with the magneto it must be remembered that most of the adjustments are performed by the rider of the machine. Any D.R., or other army motorcyclist, should have the elementary training and ability to keep the contact breaker points set to .010-.012 in., to remove and clean the H.T. pick-up brush or do likewise to the low tension earthing brush. Keeping the sparking plug clean with the gaps set to .018 in. should also be a routine job and therefore not within the scope of this article.

One point about the H.T brush holder. This has been known to give trouble under extreme conditions of water, due to this liquid finding its way to the bare end of the H.T. wire. This can be prevented if the threads on the moulded terminal are coated with vaseline or H.M.P. grease before screwing it into its holder. When new, the rubber cap is a tight fit round the cable and over the outside of the terminal, in which condition it is waterproof. However, old age and heat alter its original good fit, so allowing water to leak down between the cable and the terminal. The judicious application of grease or plasticine will cure this trouble.

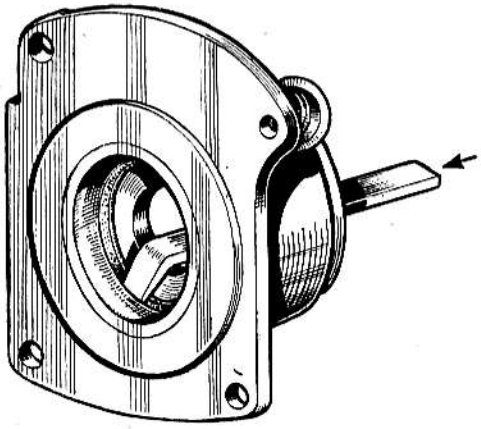

When replacing armature ball bearings a tool to these dimensions is recommended. It is best used in a hand press.

All Lucas magnetos now supplied for Army use have the face-type cam operating the contact breaker points. The points must be kept clean, and if

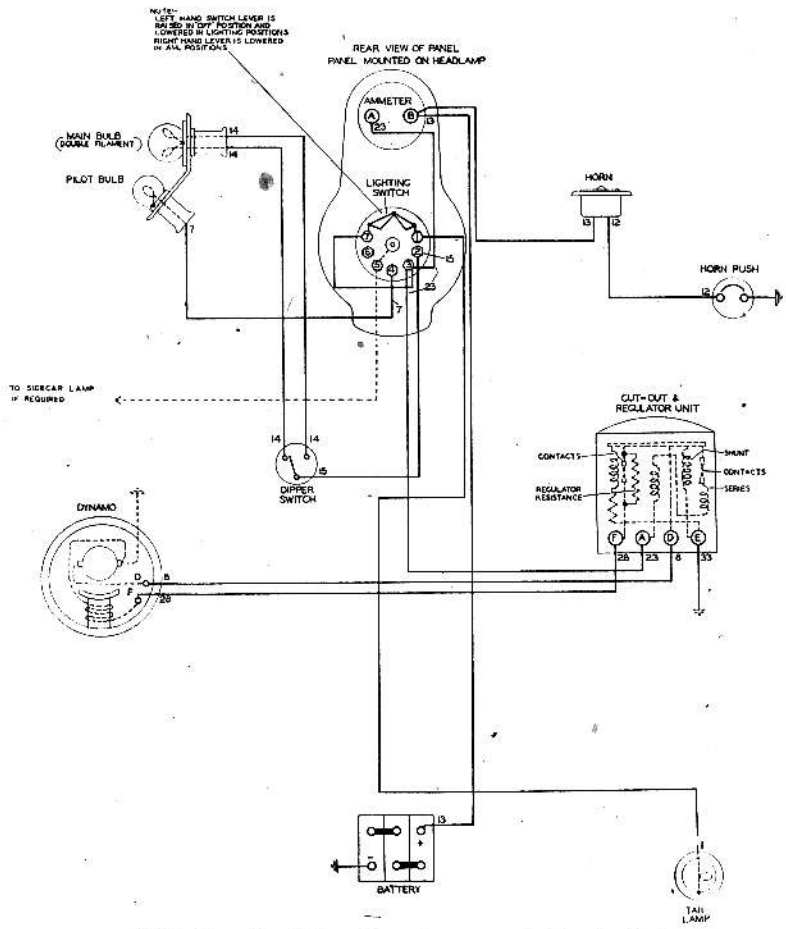

With the aid of this wiring diagram and a study of the text, the tracing of any defects in the lighting or horn circuits should provide no difficulties.

they become pitted a fine carborundum stone can be used to clean them up. Access to them is gained by removing the spring arm carrying the moving contact. When replacing the arm, see that the small backing spring is fitted immediately under the securing screw and spring washer with the bent portion facing outwards.

If the small tappet which operates the moving contact becomes tight, so causing the points to stay open, remove the contact breaker, clean the tappet and its guide, refitting it with a smear of machine oil. Whilst the contact breaker is removed apply a few drops of machine oil to the cam lubricating wick, and on re-assembly locate the contact breaker in the slot in the armature shaft. The securing screw is locked by a tab washer, which ought to be turned over after the screw is tightened.

If the above operations do not cure a weak or absent spark, the instrument will have to be removed from the machine and rectified on the bench. The process of removing the armature was aptly discussed in *Motor Cycling*, April 18, 1940, so we cannot do better than repeat those instructions.

To dismantle the "slipping clutch" apparatus it will be necessary to procure, or make up, a jig to hold the wheel whilst the securing nut is being undone. This consists simply of a length of $\frac{1}{4}$-in. mild steel rod bent to a flat U, the ends being cut short with their centres $3\frac{3}{16}$ ins. apart, so that one can be slipped in the hole in the wheel whilst the other is engaged with the hole in the top of the casting through which the dynamo securing stud normally goes. The $\frac{7}{16}$ box spanner can then be used on the central nut which unscrews in a normal left-hand direction. Note that the ear of the tab washer must be bent back first.

The next step is to remove the contact breaker end-plate, which is held in position by four screws. The advance and retard cable stop must be unscrewed, also the high-tension pick-up holder, and the small earthing brush which will be found at the side of the Magdyno. This is essential, otherwise the pick-up and brush, and perhaps the slip ring, will get broken. There is no safety gap pointer to be detached on the Magdyno, but this fitting is included under the magneto body at the slip-ring end of the magneto fitted to the Matchless and the earthing brush will be found beneath the name plate at the contact breaker end. The armature can now be knocked out with a soft drift from the drive end.

There is no need to put a "keeper" across the magnets, for of late years Lucas has used a metal known as Nifal which retains its magnetic properties more or less indefinitely. Although it loses a certain immaterial amount of power in the first removal of the armature, subsequent removals do not affect it.

When the armature has been removed it should be examined for actual structural faults, such as cracked or bent shafts. Any flaw in the winding needs special equipment to detect. If the condenser is faulty a new one *can* be fitted, but in the event of either of these faults it is desirable to fit a complete service armature.

It is important that the two ball bearings which support the armature are in good condition. If they are packed on assembly with a grease such as Duckhams H.B.B. Adcol, they will stand an almost unlimited amount of normal wear, but if they start to fail due to a bent shaft or other cause they must be replaced. They can be removed with a tool as shown in the sketch, and they should be replaced with a pressure of 250 lb. At the works this is done in an hydraulic press, but in case of emergency they can be driven in with a mandrel made to the dimensions shown in the second sketch. The serrated fibre washer fits behind the race to prevent any electrical current attacking the surface of the metal.

On re-assembly the shaft should be set up with an end clearance of .002 in. This is adjusted by means of shims which are fitted between the magneto body and the contact breaker housing.

When re-assembling the clutch it is not difficult to get the correct degree of pressure on the central steel spring. The springs are calibrated to give this pressure when the nut is dead tight. It is possible to check the degree of slip by locking the driving wheel. The clutch should fail to transmit more than 10 ft.-lb., i.e., 10 lb. pull measured on a spring balance via a spanner 1 ft. long. The minimum loading is 4 ft.-lb.